REAR FENDER ASSEMBLY

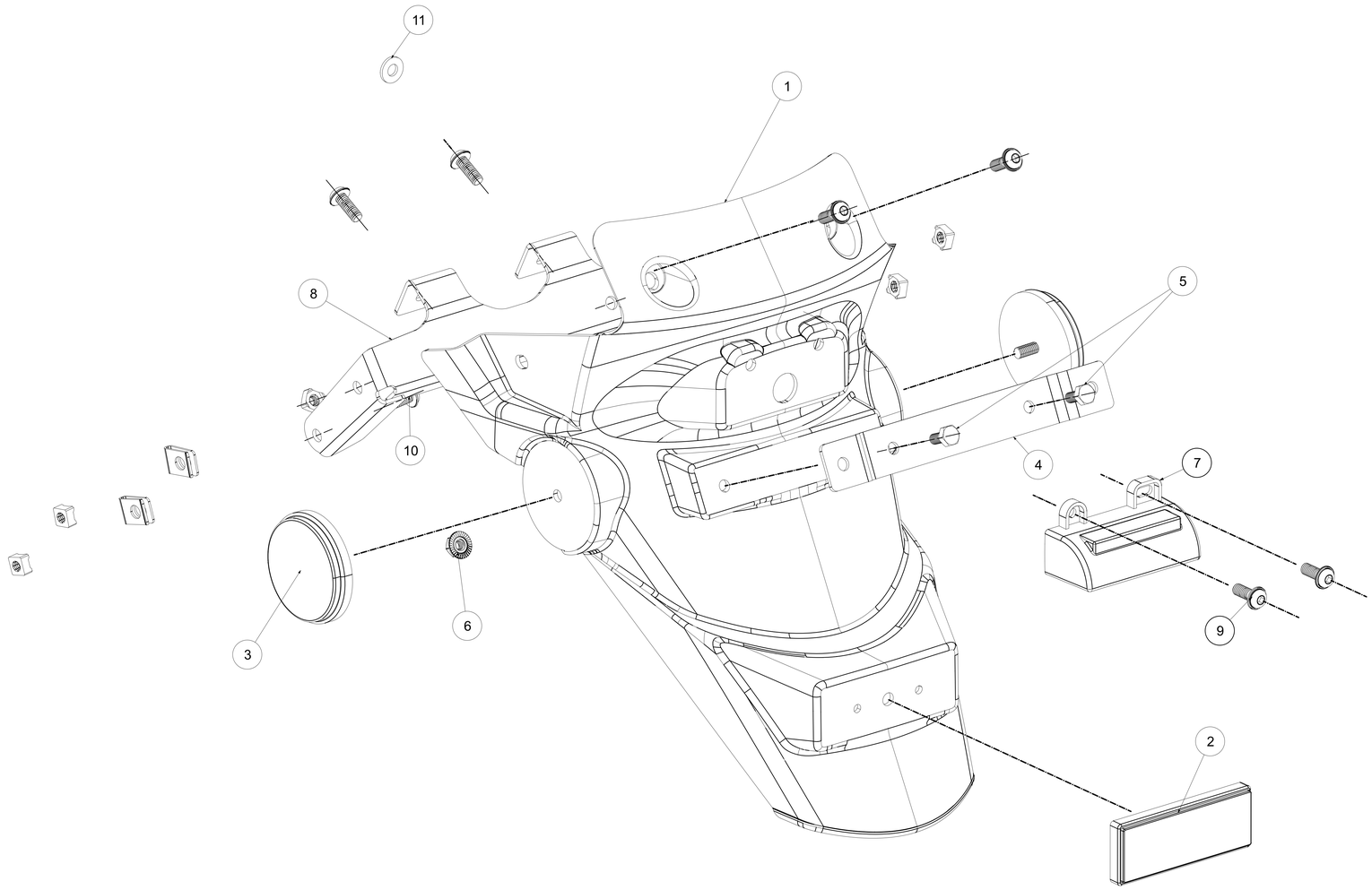

A0